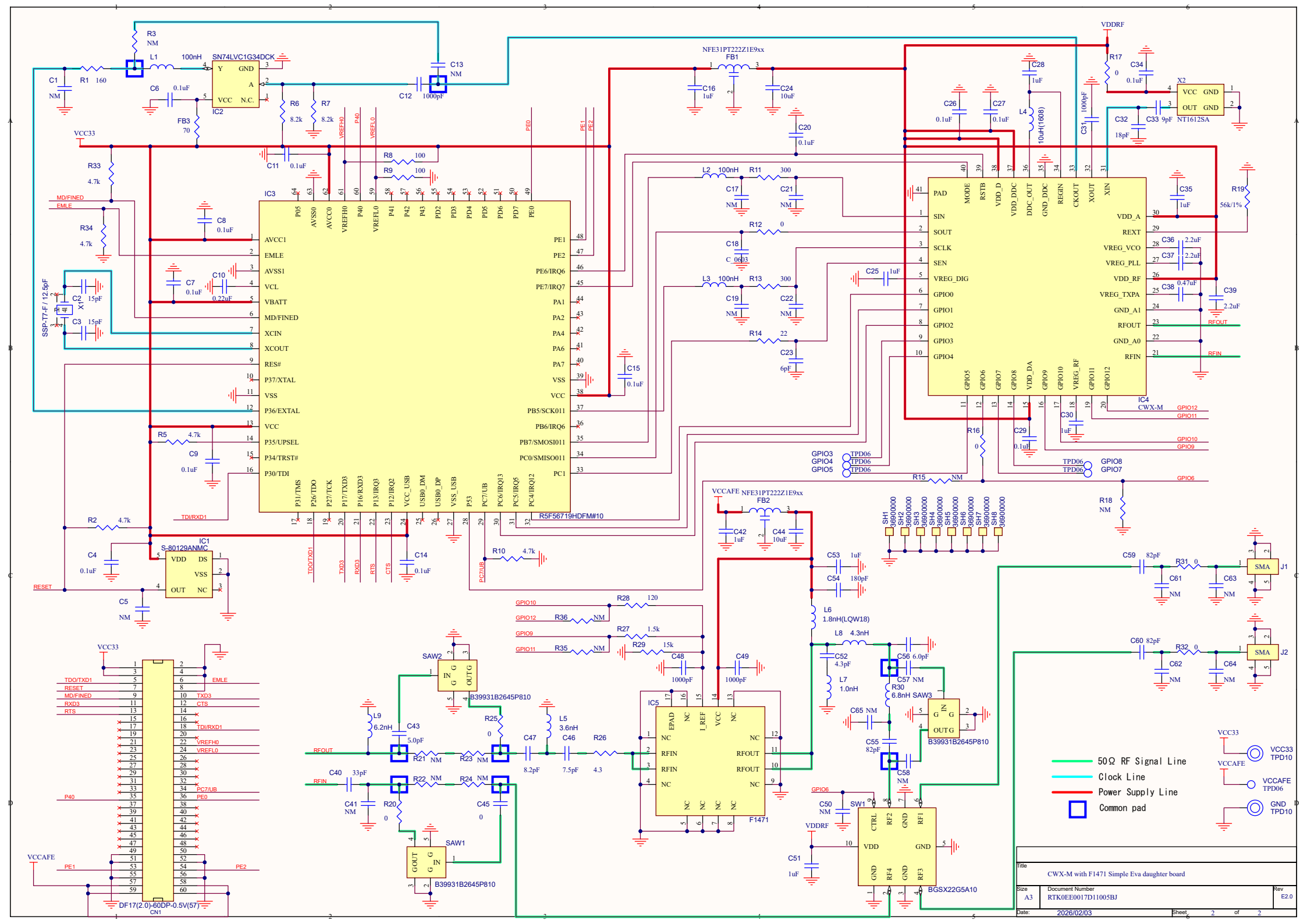

Title: CWX-M with F1471 Simple Eva daughter board

Size: A3 | Document Number: RTK0EE0017D11005BJ | Rev: E2.0

Date: 2026/02/03 | Sheet 2 of 2